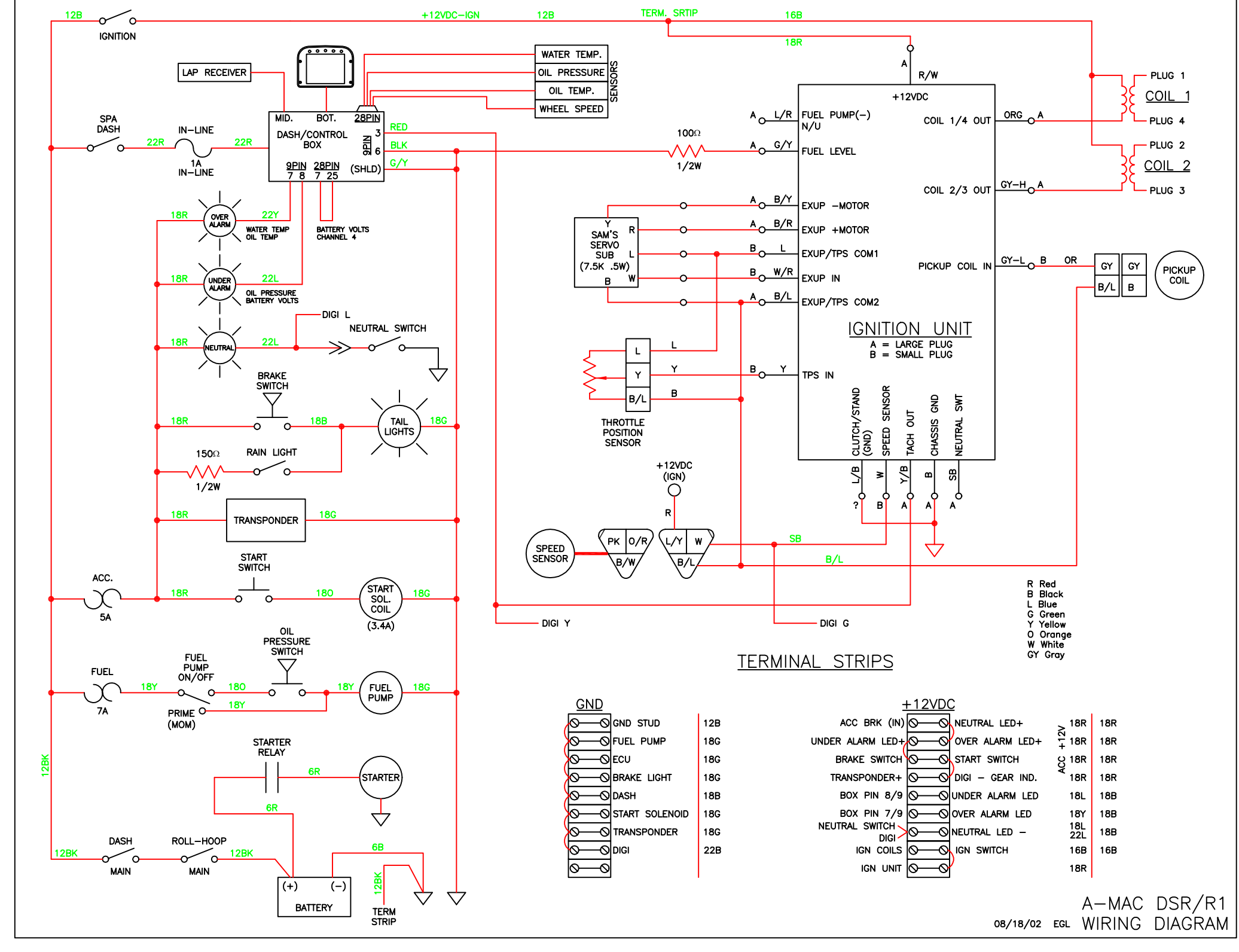
12B
IGNITION
+12VDC–IGN
12B
TERM. SRTIP
16B
18R
LAP RECEIVER
WATER TEMP.
OIL PRESSURE
OIL TEMP.
WHEEL SPEED
SENSORS
SPA DASH
22R
IN–LINE
1A IN–LINE
22R
MID. BOT. 28PIN
DASH/CONTROL BOX
9PIN 3
9PIN 6
9PIN 7 8 28PIN 7 25 (SHLD)
RED
BLK
G/Y
100Ω
1/2W
A R/W
+12VDC
A L/R FUEL PUMP(–) N/U
A G/Y FUEL LEVEL
A B/Y EXUP –MOTOR
A B/R EXUP +MOTOR
B L EXUP/TPS COM1
B W/R EXUP IN
A B/L EXUP/TPS COM2
B Y TPS IN
COIL 1/4 OUT ORG A
COIL 2/3 OUT GY–H A
PICKUP COIL IN GY–L B OR
PLUG 1
COIL 1
PLUG 4
PLUG 2
COIL 2
PLUG 3
GY GY B/L B
PICKUP COIL
IGNITION UNIT
A = LARGE PLUG
B = SMALL PLUG
CLUTCH/STAND (GND) SPEED SENSOR TACH OUT CHASSIS GND NEUTRAL SWT
L/B W Y/B B SB
? B A A A
SAM'S SERVO SUB (7.5K .5W)
Y R L B W
THROTTLE POSITION SENSOR
L Y B/L
L Y B
+12VDC (IGN)
R
SPEED SENSOR
PK O/R B/W
L/Y W B/L
SB
B/L
DIGI Y
DIGI G
18R OVER ALARM 22Y
WATER TEMP OIL TEMP
BATTERY VOLTS CHANNEL 4
18R UNDER ALARM 22L
OIL PRESSURE BATTERY VOLTS
18R NEUTRAL 22L
DIGI L
NEUTRAL SWITCH
BRAKE SWITCH
18R 18B TAIL LIGHTS 18G
150Ω 1/2W
RAIN LIGHT
18R TRANSPONDER 18G
START SWITCH
ACC. 5A
18R 18O START SOL. COIL (3.4A) 18G
OIL PRESSURE SWITCH
FUEL 7A
FUEL PUMP ON/OFF
18Y 18O 18Y FUEL PUMP 18G
PRIME (MOM)
18Y
STARTER RELAY
6R STARTER
6R
12BK
DASH MAIN
ROLL–HOOP MAIN
12BK 12BK
6B
(+) (–) BATTERY
12BK
TERM STRIP
R Red
B Black
L Blue
G Green
Y Yellow
O Orange
W White
GY Gray
TERMINAL STRIPS
GND
GND STUD 12B
FUEL PUMP 18G
ECU 18G
BRAKE LIGHT 18G
DASH 18B
START SOLENOID 18G
TRANSPONDER 18G
DIGI 22B
+12VDC
ACC BRK (IN) NEUTRAL LED+ +12V 18R 18R
UNDER ALARM LED+ OVER ALARM LED+ +12V 18R 18R
BRAKE SWITCH START SWITCH ACC 18R 18R
TRANSPONDER+ DIGI – GEAR IND. 18R 18R
BOX PIN 8/9 UNDER ALARM LED 18L 18B
BOX PIN 7/9 OVER ALARM LED 18Y 18B
NEUTRAL SWITCH DIGI NEUTRAL LED – 18L 22L 18B
IGN COILS IGN SWITCH 16B 16B
IGN UNIT 18R
A–MAC DSR/R1
08/18/02 EGL WIRING DIAGRAM